HD9144

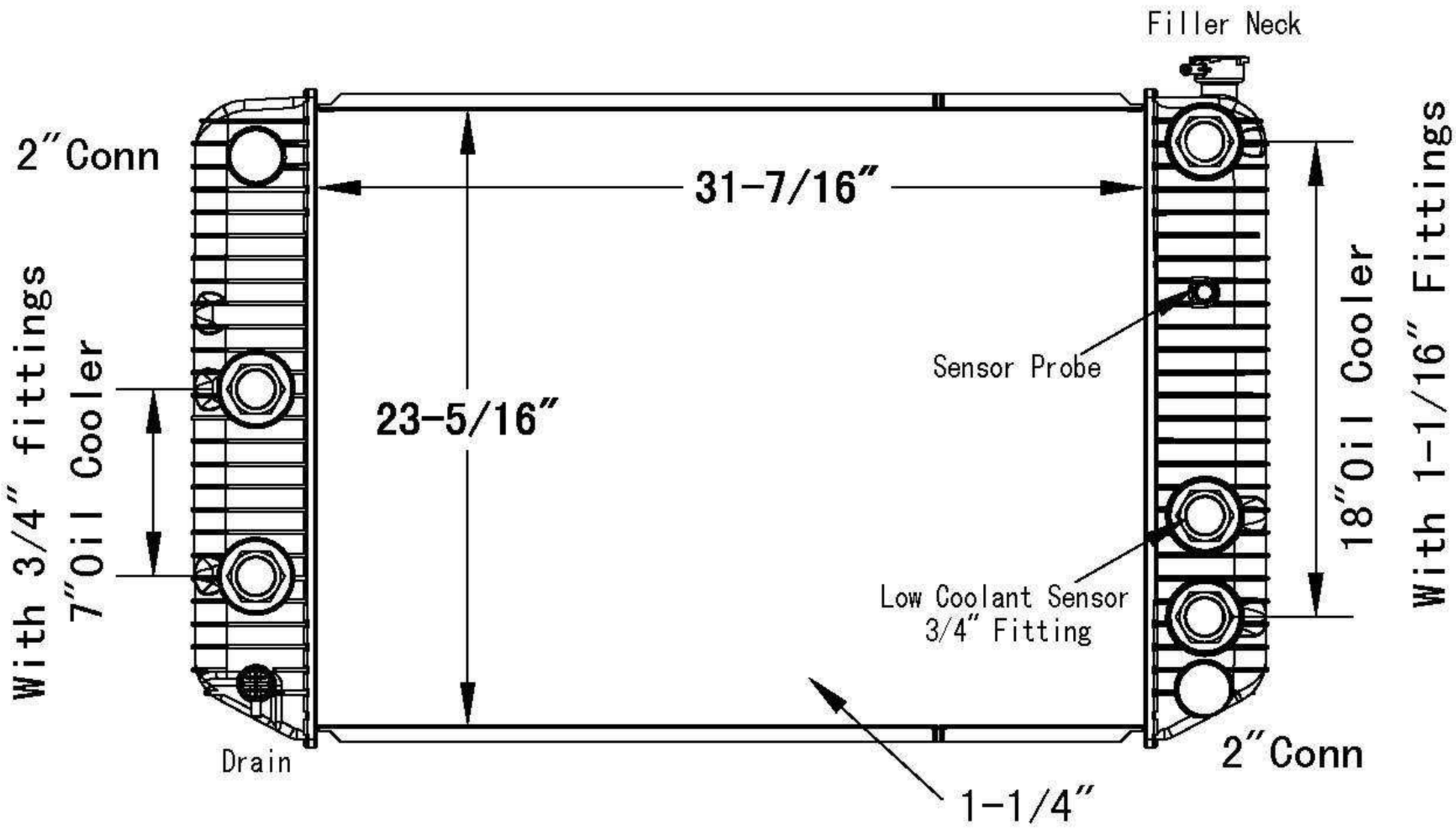
Filler Neck
2″Conn
31-7/16″
With 3/4″ fittings
7″Oil Cooler
23-5/16″
Sensor Probe
18″Oil Cooler
With 1-1/16″ Fittings
Low Coolant Sensor
3/4″ Fitting
Drain
2″Conn
1-1/4″