HD9158

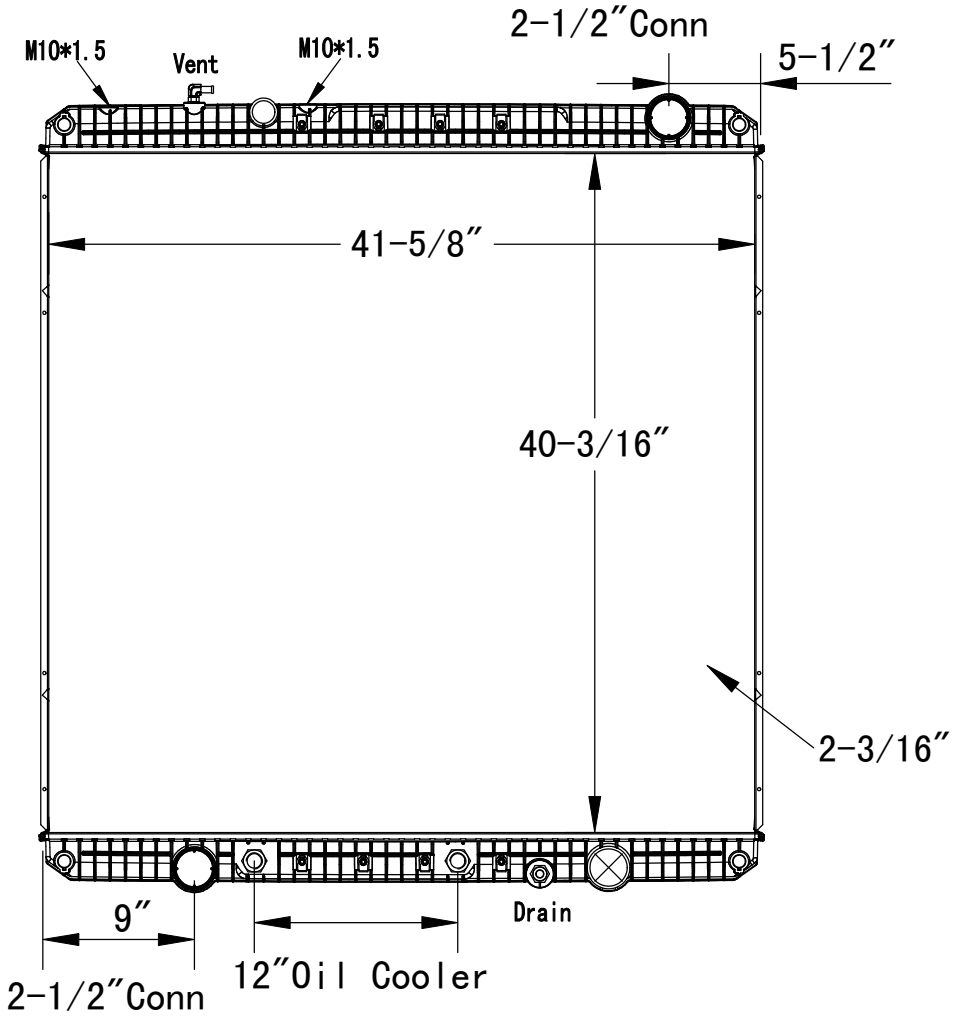
M10*1.5
Vent
M10*1.5
2-1/2″Conn
5-1/2″
41-5/8″
40-3/16″
2-3/16″
9″
Drain
12″Oil Cooler
2-1/2″Conn